KRGS

ROLLER GRILLES AND SHUTTERS

est. 2007

1 YEAR WARRANTY

FOLDING CLOSURE MESH

Retail and commercial
Suitable for both internal and external use

The KRGS Folding Closure Mesh allows you to have a security concertina doors in any shape and any length. These commercial folding doors have no floor track, eliminating any trip hazards.

Custom made in standard 150mm or 300mm wide panels these concertina doors allow your shop front to become an illusion.

Suitable applications include shopping centres, shop fronts, club and hotel bars, counter tops, kiosks, arcades, serveries, sporting clubs and stadiums, airports, schools and doorways.

The KRGS Folding Closure Mesh can be filled with your choice of clear infill, vision mesh or a combination to meet your requirements. The KRGS Folding Closure Mesh can be supplied in a vast arrange of sizes and colour finishes to suit all decors.

APPLICATIONS

- Ideal for shopping centres, shop fronts, club and hotel bars, counter tops, kiosks, arcades, serveries, sporting clubs and stadiums, airports, schools and doorways.
- Suitable for openings up to 4200mm in height by any length
- High level of security

ARCHITECTURAL SPECIFICATION

Supply and install Folding Closure Mesh manufactured by KRGS Roller Grilles and Shutters 1800 897 822.

A DOOR DESIGN WITH YOU IN MIND

FOLDING CLOSURE MESH

KRGS ROLLER GRILLES AND SHUTTERS

KRGS Folding Closures Mesh are especially suited for large openings where a complete open area is desired. Any shop, any size, no floor track is required.

SPECIFICATIONS KRGS Folding Closures Mesh are available in the standard 300mm width panel and also in a 150mm panel, to provide versatility to shopfront design.

TRACK is to be constructed from sturdy aluminium 36mm wide by 40mm high, curved track can be supplied with a 600mm (to the centre of the track) standard radius. Special radiuses are available on request. The track has a unique aligning pin and bar system to ensure smooth operation of the closure.

CURTAIN The curtain is constructed of low friction continuous hinges panel in sections up to 3000m each, these are interlocked and secured on to the locking posts at each end, and sections are then joined via a unique intermediate post system which has bottom only locking to secure it. The panels are in filled with perforated mesh.

LOCKING is via a key system which throws a steel rod up through the top track and also one down into a dust proof floor socket that is drilled into the floor. Key Operation is form both inside and out. Multiple doors can also be keyed alike.

EGRESS a simple emergency egress door can be incorporated into any closed folding closure that has a minimum height of 2250mm, operatable with interior single down action handle, panels to swing outwards to create a clear opening of 915mm by 2140mm please consult a KRGS Technician for more information or optional pricing.

WEIGHT AND STACKING Door weight is 45kg/ lineal metre. For door stack sizing refer to the Technical Data Sheet

OPERATION All folding closures are manual operation. The closure is designed so that all modes of operation and locking is at the user standing level.

FINISH Clear anodised is the standard, whilst Dulux powder coat range is available as an optional extra.

- **PLAN DETAILS**

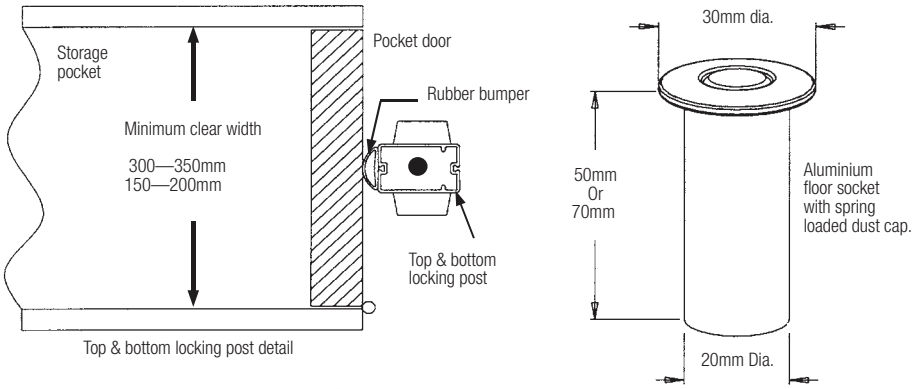

Top & bottom locking post detail

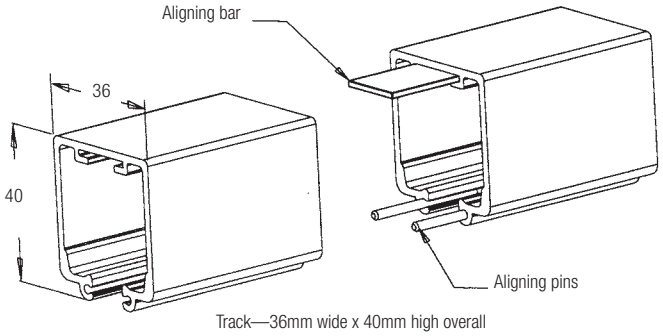

Track—36mm wide x 40mm high overall

TYPICAL LAYOUTS

SINGLE STACK INTO POCKET WITH WALL CHANNEL ON POCKET DOOR

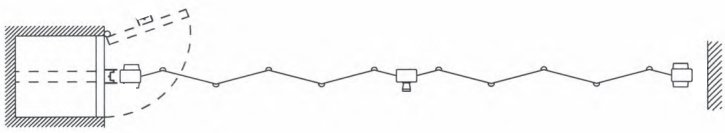

IFA

WARRANTY A 12 month warranty against defective materials and workmanship applies.
NOTE KRGS ROLLER GRILLES AND SHUTTERS HAS A CONTINUOUS PROGRAM OF DEVELOPMENT SIZES OR CONFIGURATION OF PRODUCT MAY CHANGE AT ANY TIME.
FOR THE LATEST IN DESIGN AND SPECIFICATION PLEASE CONSULT WITH KRGS BY CALLING US.

Master Builders Association MEMBER
MASTER BUILDER, BETTER BUILDER

A DOOR DESIGN WITH YOU IN MIND

SYDNEY 8 Enterprise Circuit
Prestons NSW 2170
Phone 02 9608 9888
1800 987 822
Fax 02 9608 9333
Email sales@krgsdoors.com.au
Web www.krgsdoors.com.au

MELBOURNE Phone 0477 800 094
Email sales@krgsdoors.com.au
BRISBANE Phone 0447 710 947
Email sales@krgsdoors.com.au

ADELAIDE Phone 0474 418 168
Email sales@krgsdoors.com.au
PERTH Phone 0406 661 376
Email sales@krgsdoors.com.au

KRGS ROLLER GRILLES AND SHUTTERS